Clarke®



PLASMA CUTTER
WITH BUILT-IN COMPRESSOR
MODEL NO: PLASMA KING 35CI

PART NO: 6016024

USER INSTRUCTIONS

UK CA | CE

ORIGINAL INSTRUCTIONS

GC 04/26

INTRODUCTION

Thank you for purchasing this CLARKE Plasma Cutter.

Before attempting to use this product it is essential that you read this manual thoroughly and carefully follow all instructions given. In doing so you will ensure the safety of yourself and that of others around you and you can also look forward to the product giving you long and satisfactory service.

If however, having followed the instructions in this booklet carefully, you encounter problems, take the unit to your local CLARKE dealer.

Ensure that all components are present. Should any loss or damage be apparent, please contact your CLARKE dealer immediately.

Please keep these instructions in a safe place for future reference.

GUARANTEE

This CLARKE product is guaranteed against faulty manufacture for a period of 12 months from the date of purchase. Please keep your receipt as proof of purchase.

This guarantee is invalid if the product is found to have been abused or tampered with in any way, or not used for the purpose for which it was intended.

Faulty goods should be returned to their place of purchase, no product can be returned to us without prior permission.

This guarantee does not effect your statutory rights.

ENVIRONMENTAL PROTECTION



DO NOT dispose of this product or associated components with general household waste. All tools, accessories and packaging should be sorted, taken to a recycling centre and disposed of according to the laws governing Waste Electrical and Electronic Equipment.

Through the purchase of this product, the customer is taking on the obligation to deal with the WEEE in accordance with the WEEE regulations in relation to the treatment, recycling & recovery and environmentally sound disposal of the WEEE.

In effect, this means that this product must not be disposed of with general household waste. It must be disposed of according to the laws governing Waste Electrical and Electronic Equipment (WEEE) at a recognised disposal facility.

SPECIFICATION

Model	**Plasma King 35Ci**
Part number	6016024
Dimensions L x W x H	445 x 215 x 285 mm
Weight	11.6 kg
Output min/max Amps	15-30 A
Open circuit voltage	325V
Input voltage	230V ~ 50 Hz
Max input current I1Max/I1eff	22.6 A/10 A
Peak input power	5198 W
Ingress protection rating	IP21S
Insulation class	Class 1
Rated air pressure	0.3-04 Mpa (3-4 bar)
Max cutting capacity	Steel 8mm / Stainless Steel 4mm / Aluminium 6mm / Copper 4mm
Duty Cycle	3 x mins in every 10 mins 12 mins in every 60 mins
Power cable length	2.0 m
Torch cable length	3.0 m
Earth cable	1.95 m

GENERAL SAFETY PRECAUTIONS

Your plasma cutting unit is fitted with sophisticated safeguards which block functioning and therefore the cutting operations until all the safety conditions are present. The plasma cutting technique requires dangerously high voltage for pilot arc starting and during cutting, therefore the following safety rules must be observed with great care.

GENERAL SAFETY

1. **NEVER** allow children or people unfamiliar with these instructions to use the machine.
2. **NEVER** operate the plasma cutter when you are tired, ill or under the influence of alcohol, drugs or medication.
3. **ALWAYS** wear suitable clothing and footwear.
4. **REMEMBER..**.the operator or user is responsible for accidents or hazards occurring to other people or their property.

ELECTRICITY

1. Make sure that the unit is earthed and that the supply line has an adequate earth connection.
2. Make sure that the work bench has a satisfactory earth connection.
3. Avoid contact between the metal bars being cut and bare skin or damp clothes.
4. **DO NOT** lean on the piece being cut or hold it in your hands.
5. **DO NOT** use in damp environments or on wet surfaces.
6. **DO NOT** use the unit if the torch or cables appear damaged.
7. **ALWAYS** turn the unit off before replacing any torch components.
8. **ALWAYS** switch the unit off and remove the power cable from the mains socket before carrying out any maintenance on the unit.



CAUTION: IF DURING THE CUTTING OPERATION A SLIGHT ELECTRIC SHOCK IS FELT, STOP WORK IMMEDIATELY AND **DO NOT** USE THE UNIT UNTIL THE FAULT HAS BEEN DISCOVERED AND RESOLVED.

CUTTING FUMES AND GASES

Harmful fumes and metallic powders are produced during the cutting operation. Metals which are painted or coated or which contain mercury, cadmium, zinc, lead and graphite may produce harmful concentrations of toxic fumes during cutting.

Parts & Service: 020 8988 7400 / E-mail: Parts@clarkeinternational.com or Service@clarkeinternational.com

1. To protect the operator or other persons from exposure to possible toxic fumes, fume respirators should be worn and work areas should be adequately ventilated.
2. When working in enclosed environments, an extractor should be provided.



CAUTION: WHEN SOLVENTS OR DE-GREASING AGENTS ARE PRESENT, THE MATERIAL TO BE CUT SHOULD BE CLEANED PROPERLY TO PREVENT THE FORMATION OF TOXIC GASES. SOME CHLORINATED SOLVENTS MAY DECOMPOSE IN THE PRESENCE OF THE RADIATION GIVEN OUT BY THE ARC AND MAY GENERATE PHOSGENE GAS.

FIRE HAZARDS

1. Prevent sparks or hot scale from producing flames.
2. Remove inflammable or combustible materials from the cutting area.
3. Make sure that fire-fighting equipment is located near the work area.
4. Situate the unit in an area where the air can pass through the grilles on the machinel.



CAUTION: **DO NOT** CUT FUEL OR LUBRICANT CONTAINERS EVEN IF THESE ARE EMPTY. **DO NOT** CUT CONTAINERS OR CASINGS WHICH CONTAIN INFLAMMABLE MATERIAL. NEVER CUT IN ENVIRONMENTS WHICH ARE CONTAINING INFLAMMABLE GAS OR COMBUSTIBLE LIQUID VAPOURS (SUCH AS PETROL).

EMC

Before using the plasma cutting unit, inspect the surrounding area, observing the following guidelines:

1. Make sure that there are no other power supply cables, control lines, telephone leads or other equipment near the unit.
2. Make sure that there are no radio receivers or television appliances.
3. Make sure there are no computers or other control systems.
4. Make sure that there is no-one with a pacemaker or hearing aid in the area around the unit.
5. Check the immunity of any other equipment operating in the same environment. In certain cases additional protective measures may be required.

Interference can be reduced in the following ways:

1. If there is interference in the power supply line, an E.M.C. filter should be inserted between the mains and the unit.
2. The output cables of the unit should be shortened; these should be kept close together and stretched along the ground.
3. All the panels of the unit should be correctly fitted after carrying out repairs.

Parts & Service: 020 8988 7400 / E-mail: Parts@clarkeinternational.com or Service@clarkeinternational.com

PERSONAL PROTECTIVE EQUIPMENT

One of the hazards during the cutting process is the emission of electromagnetic waves due to the electric arc. The length of these waves ranges from infrared to ultraviolet. If these rays hit the eyes, they can cause various complaints such as conjunctivitis, burns to the retina, deterioration of sight, etc. Moreover a high concentration of ultraviolet rays can burn the skin. It is, therefore, extremely important that the operator uses adequate protective clothing such as:

- Leather gloves
- Spark-proof footwear
- Safety mask large enough to cover the whole of the face, equipped with safety lenses able to filter all the radiation and reduce the intensity of the light produced
- Safety glasses can alternatively be used be used if rated at level 4 or 5 protection.



CAUTION: **NEVER**, UNDER ANY CIRCUMSTANCES, LOOK AT AN ELECTRIC ARC WITHOUT EYE PROTECTION.

CAUTION: A FURTHER HAZARD FOR EYES IS THE RISK OF SPLINTERS OR PARTICLES WHICH MAY BE DETACHED DURING THE CUTTING OPERATIONS OR DURING GRINDING, BRUSHING OR HAMMERING AWAY OF ANY SCALE. ALWAYS WEAR GOGGLES OR PROTECTIVE SHIELDS TO PROTECT THE EYES

IMPORTANT: Safety screens should be installed around the work area to protect other people who may be working in adjacent areas from the radiation given out by the arc.

Parts & Service: 020 8988 7400 / E-mail: Parts@clarkeinternational.com or Service@clarkeinternational.com

SAFETY SYMBOLS

The following safety symbols are shown on a label on the machine. The meanings of the markings and symbols are shown below

	Read instruction manual before use		Wear protective gloves when using this product
	Wear eye protection when using this product.		Wear protective footwear
	Wear welding mask	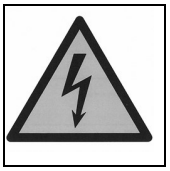	Electrical hazard
	Caution - gases & fumes		For indoor use only
	Wear face mask to protect against fumes		General hazard symbol

Parts & Service: 020 8988 7400 / E-mail: Parts@clarkeinternational.com or Service@clarkeinternational.com

PRINCIPLES OF OPERATION

WHAT IS PLASMA CUTTING

Plasma cutting is a fast, clean and distortion free, means of cutting through all types of metal from mild and stainless steels to aluminium brass and copper.

- An inert gas (compressed air) is blown at high speed out of the nozzle whilst at the same time an electrical arc travels through the gas, heating it to an extremely high temperature which ionizes the gas.
- The column of heated ionized gas is called Plasma and is a good conductor of electricity.
- The cutting procedure utilises the plasma to transfer the electric arc to the metal workpiece which is melted by the heat and then blown out of the way using the compressed air supply.

HOW THE PLASMA CUTTER WORKS

The start of the cycle is determined by an arc which is struck between the electrode (negative polarity) and the torch nozzle (positive polarity) due to the short circuit between these two elements.

When the torch is brought into direct contact with the workpiece (connected to the positive polarity of the power source) the arc is created between the electrode and the workpiece itself thus striking a plasma arc, also called the cutting arc.

A thermal protection device is installed at a point most subject to high temperatures such as the power transformer and rectifying units. An amber light on the front panel lights up when the thermal protection device intervenes.

LIST OF ITEMS SUPPLIED

The machine is delivered with the following components:

- Air regulator and mounting bracket
- Pressure gauge
- Air tube
- Air hose connector
- SG55 plasma torch assembly/cable
- Earth lead with clamp
- Spare torch parts

Parts & Service: 020 8988 7400 / E-mail: Parts@clarkeinternational.com or Service@clarkeinternational.com

OVERVIEW

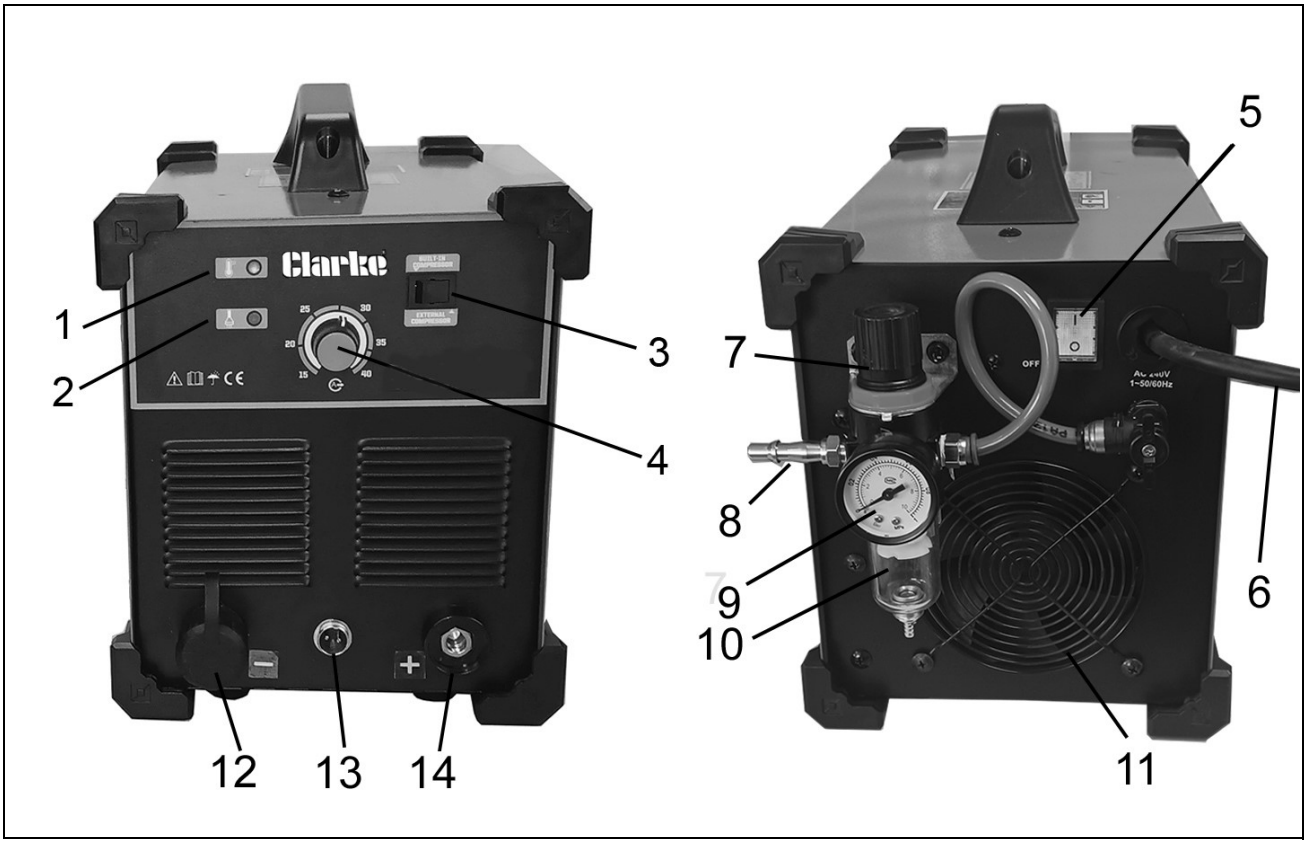

1	Overheating indicator	This indicates the machine has shut down due to overheating. It will re-start once it has cooled.	
2	Power on LED	Indicates the machine is active.	
3	Compressor selection	Selector switch between internal/external compressor	
4	Current control knob	Adjusts the cutting current supplied by the machine according to the thickness of material/ cutting speed.	
5	ON/OFF switch	6	Power cable (with plug)
7	Air regulator	8	Compressed air connection
9	Air pressure gauge	10	Air filter
11	Cooling fan inlet grille	12	Connector for earth cable
13	Auxiliary connector	14	Connector for cutting torch

ELECTRICAL CONNECTIONS

WARNING! READ THESE ELECTRICAL SAFETY INSTRUCTIONS THOROUGHLY BEFORE CONNECTING THE MACHINE TO THE MAINS SUPPLY.

Before switching the product on, make sure that the voltage of your electricity supply is the same as that indicated on the rating plate. This product is designed to operate on 230VAC 50Hz. Connecting it to any other power source may cause damage.

This product may be fitted with a non-rewireable plug. If it is necessary to change the fuse in the plug, the fuse cover must be refitted. If the fuse cover becomes lost or damaged, the plug must not be used until a suitable replacement is obtained.

If the plug has to be changed because it is not suitable for your socket, or due to damage, it should be cut off and a replacement fitted, following the wiring instructions shown below. The old plug must be disposed of safely, as insertion into a mains socket could cause an electrical hazard.

If the colours of the wires in the power cable of this product do not correspond with the markings on the terminals of your plug, proceed as follows.

- The **Blue** wire must be connected to the terminal marked **N** or coloured **Black**.
- The **Brown** wire must be connected to the terminal marked **L** or coloured **Red**.
- The **Yellow and Green** wire must be connected to the terminal marked **E** or ⏚ or coloured **Green**.

Plug must be BS1363/A approved.

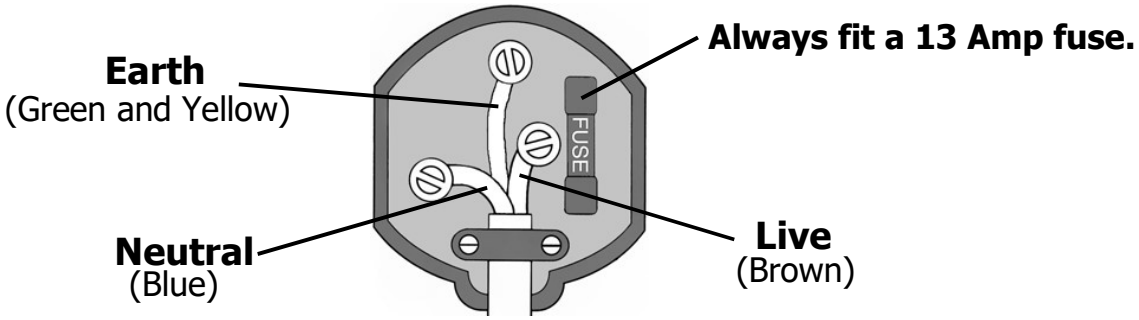

Ensure that the outer sheath of the cable is firmly held by the clamp

We strongly recommend that this machine is connected to the mains supply via a Residual Current Device (RCD). If in any doubt, consult a qualified electrician. **DO NOT** attempt any repairs yourself.

COMPRESSED AIR SUPPLY

AIR SUPPLY AND PRESSURE

The plasma cutter has a built-in air compressor. However, there is existing provision to fit an external regulator (supplied) for a separate air compressor. Either source can be selected using the switch on the end panel.

The built-in compressor offers maximum portability and convenience for light-duty, on-site work, eliminating the need for separate airline equipment. Conversely, an external compressor can provide higher, more consistent power for thicker and longer cuts, making this arrangement ideal for heavy-duty, permanent workshop use.

The built-in compressor also has a duty cycle which does not apply if an external air supply is used.

FITTING THE EXTERNAL FILTER/REGULATOR

A source of clean, dry air or nitrogen must be supplied. The supply pressure must be:

- Between 4 - 4.5 bar.
- Failure to operate at the correct pressure could result in excessive operating temperatures or damage to the machine.

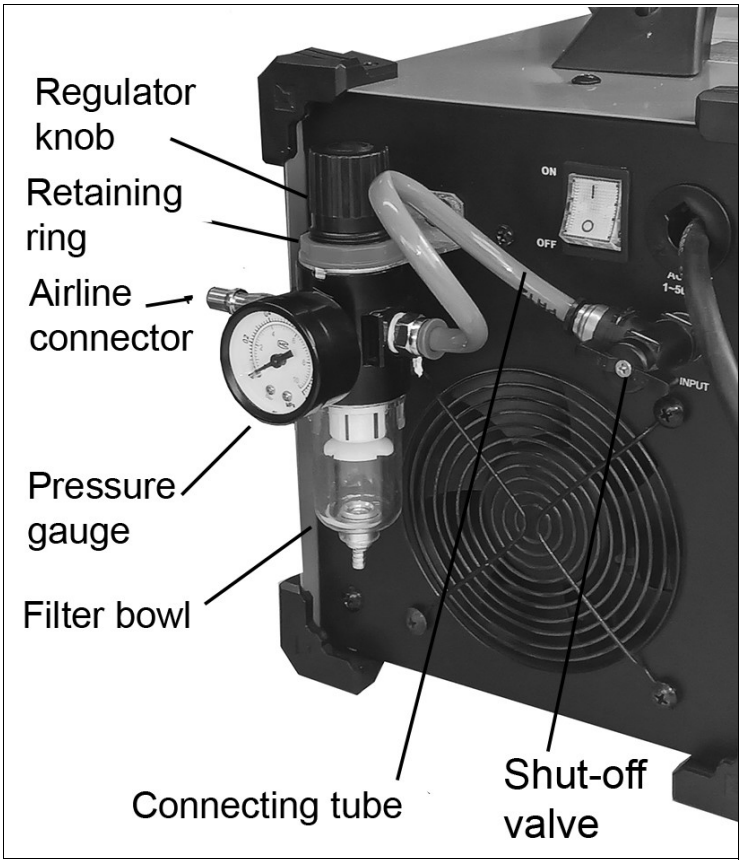

1. Fit the regulator to the machine using the mounting bracket supplied. Screw the bracket to the machine using 2 screws supplied and attach the regulator using the red retaining ring.
2. With the connector provided screwed into the regulator, connect the air connecting tube between the regulator and the back of the machine.
3. Screw the pressure gauge (supplied loose) onto the regulator.
4. Push-fit your compressed airline to the regulator.

The air regulator should be set with an optimum pressure setting of 4 bar (58 psi).

NOTE: The regulator should never be set above 90psi.

NOTE: The spring loaded drain valve (bottom of the air regulator) will be normally closed. To discharge any water build-up, pull the discharge nozzle downwards.

5. When using the stand-alone compressor supply, set the shut off valve in the straight ahead position.

MACHINE CONNECTION

1. Connect the power supply cable to a mains power socket.
2. Connect the earth cable to the right socket on the plasma cutter and twist to tighten.
3. Remove the protective cap and connect the cutting torch to the left connecting socket.
4. Connect the cutting torch auxiliary cable to the centre socket.

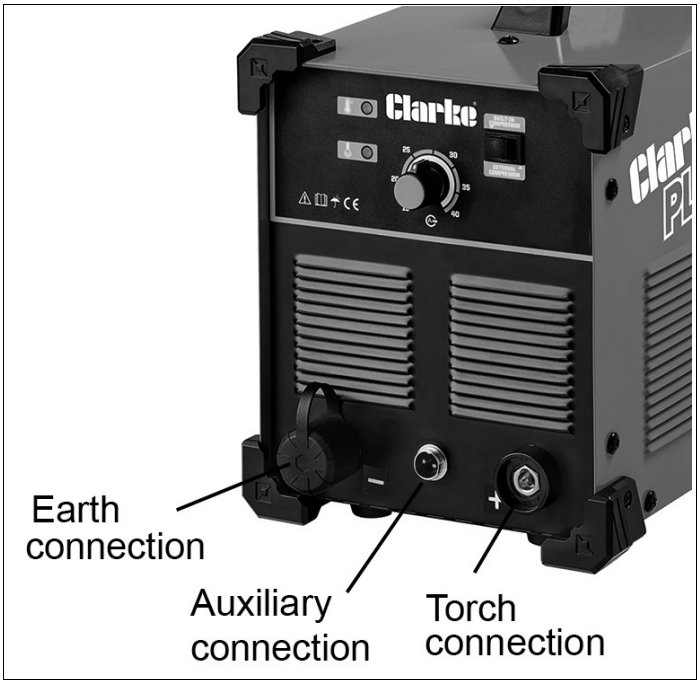

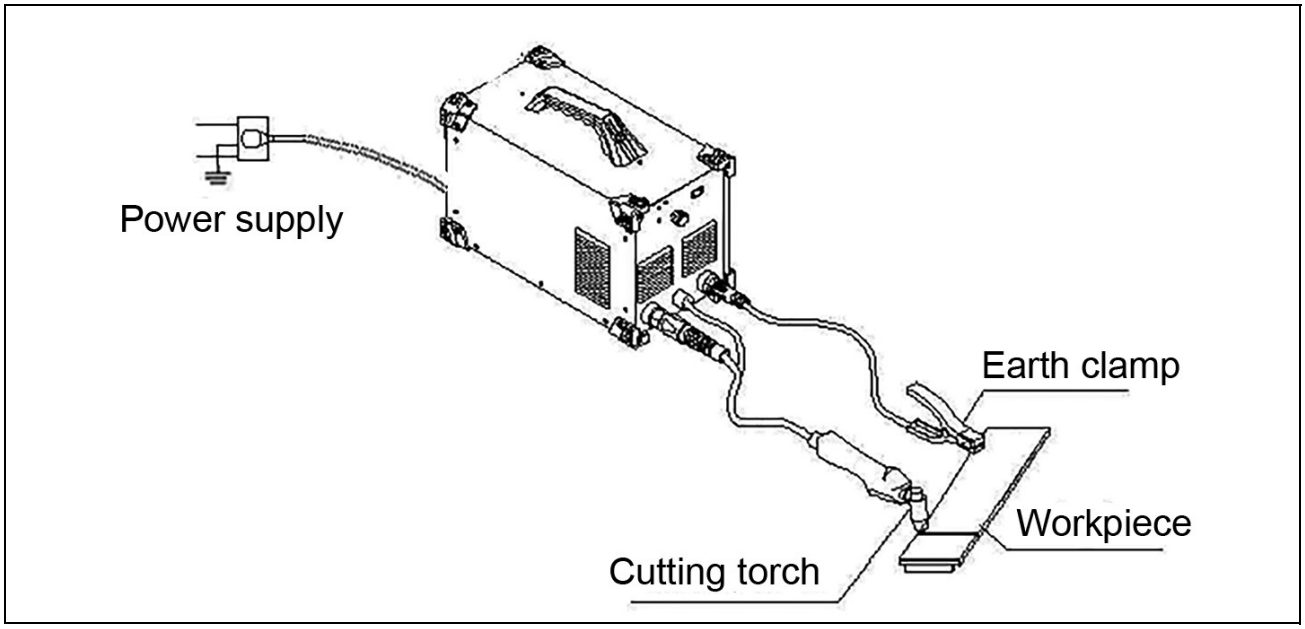

SWITCHING ON/OFF

1. Switch the plasma cutter ON using the ON/OFF switch.

- The lower LED will light up on the front panel.

Before starting, take care that no short circuit is formed between the torch and the workpiece.

PREPARING TO CUT

If the surface of the piece to be cut is painted, rusty or covered with insulating material, clean the surface so that satisfactory contact between the workpiece and the earth clamp can be obtained.

Select either internal air compressor or independent compressor supply.

Fasten the earth clamp to the workpiece. If a metal bench is being used, make sure it has also been connected to earth.

IF USING AN OUTSIDE COMPRESSOR;

1. Pull out the regulator knob and turn it fully clockwise.

- This ensures the regulator is set to minimum.

2. Turn the compressed air supply on.
3. Turn the air regulator to a pressure of 4.5 bar.
4. When the pressure is set, lock the regulator knob in position by pushing it in.

USING THE PLASMA CUTTER

The torch can be comfortably held in one hand or steadied with two hands. Choose the technique that feels most comfortable and allows good control and movement. Position the index finger or thumb to depress the control switch on the torch handle.

1. During the cutting process, the current can be adjusted by the potentiometer knob according to the cutting performance until a satisfactory cutting effect is obtained.
2. **DO NOT** touch the workpiece and cutting torch by hand until fully cooled.
3. **DO NOT** block the cooling fan of the machine while running. Check the ventilation before use.
4. **DO NOT** strain the cable.
5. **DO NOT** move the cable on sharp edges or abrasive surfaces.
6. **DO NOT** step on the cable.

Parts & Service: 020 8988 7400 / E-mail: Parts@clarkeinternational.com or Service@clarkeinternational.com

CUTTING

1. With the torch in starting position, squeeze the torch trigger. The arc will be struck and cutting begins.

- The unit will initiate gas purge (pre-flow) to remove any condensation that has accumulated in the torch.

2. Once on, the cutting arc remains on as long as the trigger is held down unless the torch is withdrawn from the work or torch motion is too slow. Keep moving while cutting.
3. Cutting speed is relative to the thickness of the workpiece material. The thinner the material, the faster the machine can cut. Adjust the speed of travel and the machine control knob until the optimum speed of work is obtained.
4. Try to keep the torch about 2mm above the surface of the workpiece as contact between the two items will shorten the life of the torch nozzle.
5. When starting, hold the torch perpendicular to the workpiece with the front of the tip on the edge of the workpiece at the point where the cut is to start.
6. Cut at a steady speed without pausing. Maintain the cutting speed so that the 'arc lag' is behind the travel direction.

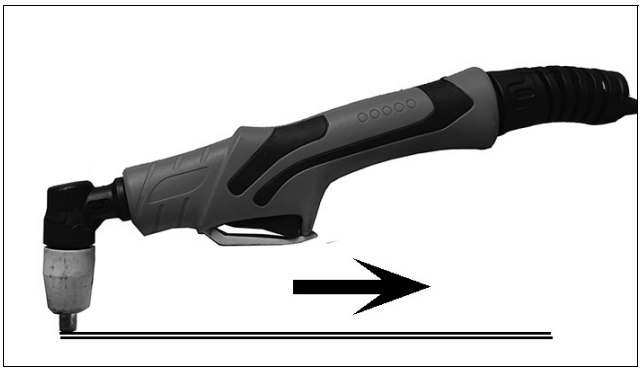

7. It is normally best to use a straight edge assuming a straight cut is required. This will prevent the torch from wandering and give a clean cut with minimal energy usage and heat buildup.
8. For curved cuts, a suitable guide or template may be used to achieve a similarly clean and accurate cut.
9. When reaching the end of the cut, slow down to avoid the nozzle touching the workpiece and sticking.

PLUNGE CUTTING

1. If plunge cutting in the centre of a workpiece, start by holding the torch at an angle of tilt in order to direct the sparks away from the torch to avoid fouling the torch tip with splatter. All particles will then blow away from the operator and torch.
2. If you need to make a cut on a metal sheet which has a thickness of more than 2mm without an edge start, make a hole using an electric drill before you start cutting.
3. Complete the piercing off the cutting line and then continue the cut onto the line. Hold the torch perpendicular to the workpiece after the cut is complete.

Parts & Service: 020 8988 7400 / E-mail: Parts@clarkeinternational.com or Service@clarkeinternational.com

4. Clean spatter and scale from the shield cup and the tip as soon as possible. Spraying or dipping the shield cup in anti-spatter compound will minimize the amount of scale which adheres to it.



CAUTION: SPARKS FROM THE CUTTING PROCESS CAN CAUSE DAMAGE TO COATED, PAINTED AND OTHER SURFACES SUCH AS GLASS, PLASTIC AND METAL

NOTE: Handle torch leads with care and protect them from damage.

- Keep the area around the machine clean and free of combustible materials.
- **DO NOT** allow items to collect which could obstruct cooling air flow to the machine.

MATERIAL CUTTING THICKNESS

Material type	**Material thickness**	
	Severance/best cut	Clean cut
Aluminium	6	4
Steel	8	5
Stainless Steel	4	3
Copper	4	3

SHUTTING OFF THE MACHINE

1. To stop cutting, lift the torch from the workpiece and release the trigger.

- When the trigger is released, compressed air will continue to flow for a short period of time in order to cool the torch. **DO NOT** switch off the machine until the air has stopped flowing or damage may occur to the torch.

2. Turn off the power, turn off the air and clean up the torch.

The cutting torch has a high temperature and should be handled properly and not placed on flammable objects or surfaces with a low melting point.

REPLACING THE NOZZLE

When more than 1.5mm of the electrode is consumed it needs to be replaced before further damage occurs. Also check for the end surface taking on an angle or if the holes have become deformed which will make it difficult to strike and arc.

Depending upon the thickness of the material being cut, the nozzle is likely to become worn after 10 meters of cutting and the electrodes may need replacing after 15 metres of continuous cutting.

Parts & Service: 020 8988 7400 / E-mail: Parts@clarkeinternational.com or Service@clarkeinternational.com

POTENTIAL PROBLEMS DURING USE

Defect	Reason
Insufficient penetration	Cutting speed too high Torch is tilted Workpiece is too thick Cutting current is too low Torch parts are worn out
Interruption of the cutting arc	Cutting speed too slow Excessive distance between torch and workpiece Power too low - adjust output current Torch parts are worn out Non-genuine manufacturer's parts Earth connection is poor
Excessive (slag) settlement	Too low cutting speed (bottom dross) Too high cutting speed (top dross) Excessive distance between torch and workpiece Cutting current too low Torch parts are worn out Non-genuine manufacturer's parts
Tilted cutting	Torch position not correct Asymmetric wear of nozzle hole and/or wrong assembly of the torch parts
Excessive wear of the nozzle and electrodes	Air pressure too low Exceeding system capability (material too thick) Contaminated supply air (humidity or oil) Improperly assembled torch Damaged or loose torch head components Non-genuine manufacturer's parts

Parts & Service: 020 8988 7400 / E-mail: Parts@clarkeinternational.com or Service@clarkeinternational.com

CARE AND MAINTENANCE

CAUTION: ENSURE THE MACHINE /TORCH COMPONENTS HAVE COOLED BEFORE BEFORE PERFORMING ANY MAINTENANCE.

MACHINE

1. Regularly clean the equipment to remove any dirt, debris that could clog up the machinery. **DO NOT** use solvents or strong detergents when cleaning the machine components.
2. Inspect the cutting cables regularly and replace any cable that show signs of damage such as fraying or cracks.
3. When not in use, store all equipment in a clean, dry, and safe location. Keep the equipment covered to protect it from dust, moisture and other environmental factors.
4. All repairs must be carried out buy a qualified service engineer.

PLASMA TORCH

The torch assembly and cable should be periodically inspected and cleaned.

- If there is damage to the insulation such as breaks, cracks and burns or even a loosening of electric conductors, the torch must not be used.

To replace the consumable parts in the torch:

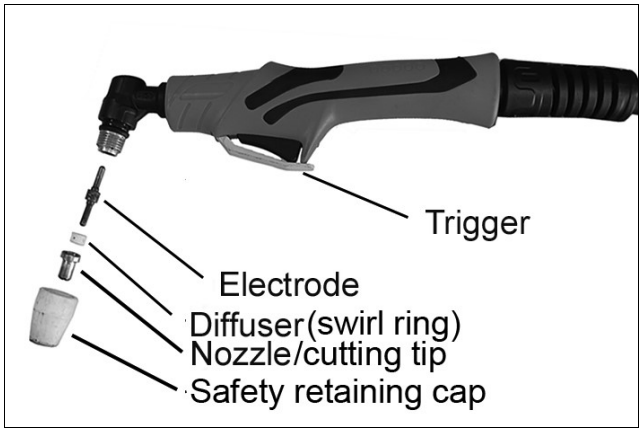

1. Unscrew the retaining cap from the torch head assembly.
   - Clean the cap thoroughly and replace if it is damaged (burns, distortions or cracks).
2. Remove the nozzle, gas diffuser ring and electrode and replace if substantially burned or otherwise damaged.
   - **ALWAYS** replace the nozzle, gas diffuser ring and electrode at the same time.
3. Replace the retaining cap taking care not to cross-thread it.

Parts & Service: 020 8988 7400 / E-mail: Parts@clarkeinternational.com or Service@clarkeinternational.com

COMPRESSED AIR FILTER

The filter/regulator unit is equipped with a filter for the compressed air which should trap any water or oil in the air supply. The filter bowl is fitted with a pull-valve for the manual drain of any condensation collected in the bowl. Pull the discharge connector downwards to drain.

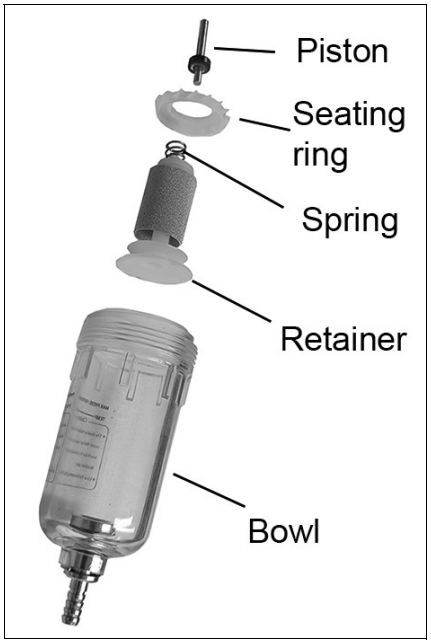

CLEANING THE AIR FILTER

If the internal parts of the air filter become foul it can be dismantled for cleaning.

Unscrew the bowl from the unit body and carefully remove the retainer, filter cartridge, spring, seating ring and piston. Washer all parts with soapy water before reassembling in reverse order.

COMPONENT PART LIST

1	Plastic handle
2	Upper cover
3	Lower shell
4	Compressor switch
5	Potentiometer knob
6	Control panel
7	LED light
8	Earth socket
9	Auxiliary socket
10	Partition panel
11	Torch connector socket
12	Relay
13	Lead coil
14	Rubber foot
15	Plastic protector

16	Air connecting on/off valve
17	Cable entry connector
18	On/off switch
19	Power cable & plug
20	Fan grille
21	Rectifier bridge
22	Fan
23	Air pump
24	Cooling fan
25	Air pump cover
26	Capacitor
27	Plastic support
28	Main transformer
29	High pressure controller
30	Auxiliary Transformer

COMPONENT PART DIAGRAM

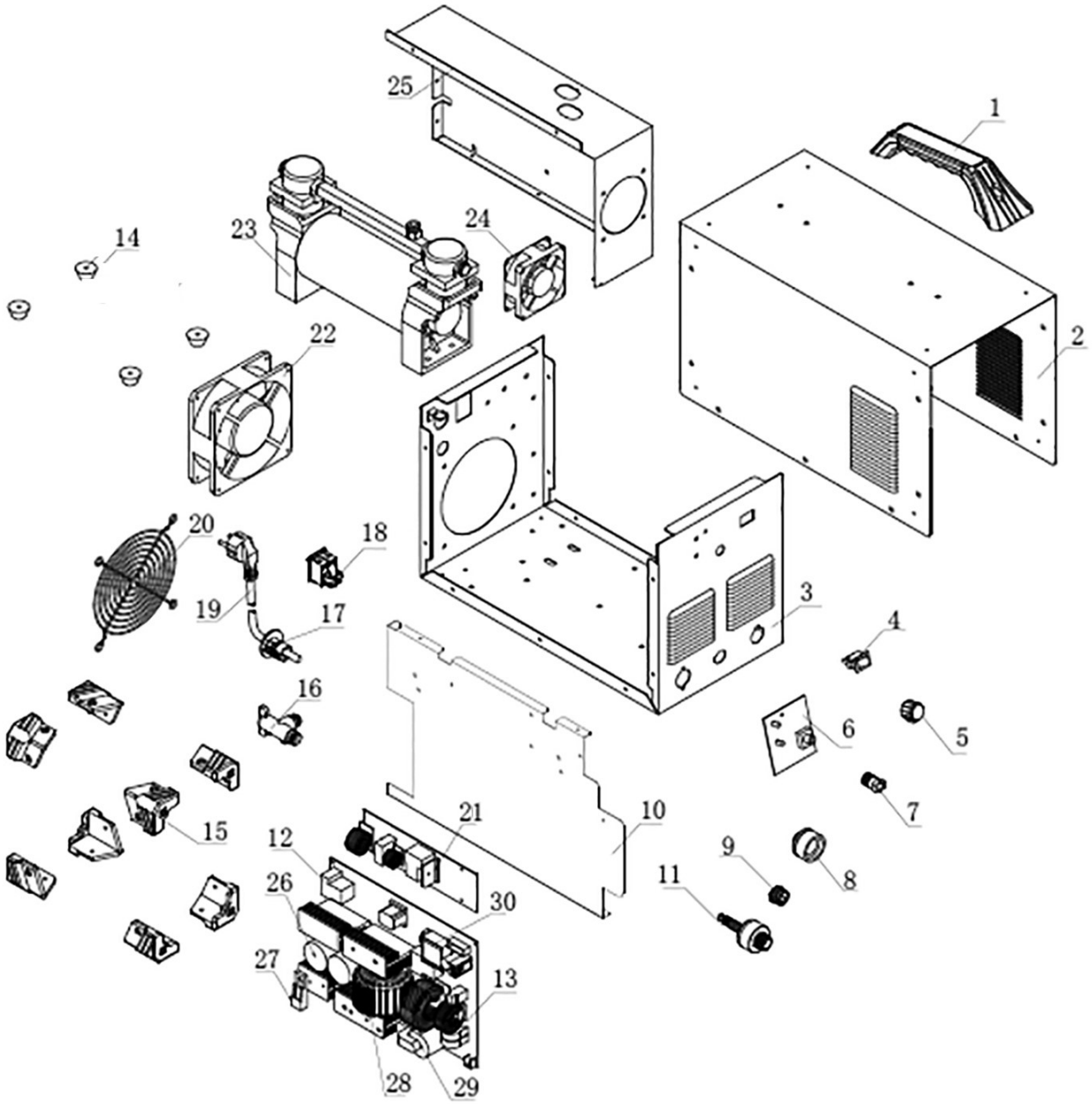

POSSIBLE MACHINE FAULTS

Problem	Remedy
Power LED OFF No input power. Fan not operating.	Plug unit into power outlet. Reset circuit breaker.
Power LED ON YELLOW LED ON Unit has overheated.	Make sure the unit has not been operated beyond duty cycle limits. Air flow obstructed.
Power LED ON Lack of air flow at cutting torch	Air not connected or pressure too low. Check source for at least 4 Bar (60 psi) during purge or pre-flow and adjust air pressure to approx 4.5 Bar (65 psi). Air filter or air line blocked, torch blocked. Check that torch lead is free of twists or kinks. Replace the airline filter cartridge.
Power LED ON YELLOW LED OFF No air flow when torch switch pressed.	Shield not properly installed on torch. Check that shield is fully seated against torch. Faulty torch switch. Faulty main PC board repair/replace power supply. Contact your CLARKE service department.
Power LED ON YELLOW LED OFF Air flows, cutting arc does not start.	Faulty torch parts. Inspect torch parts and replace if necessary. Air/Gas pressure too high. Set pressure to 65 psi (4.5 BAR). Faulty main PC Board. Contact your CLARKE service department.

Parts & Service: 020 8988 7400 / E-mail: Parts@clarkeinternational.com or Service@clarkeinternational.com

MACHINE RATING PLATE

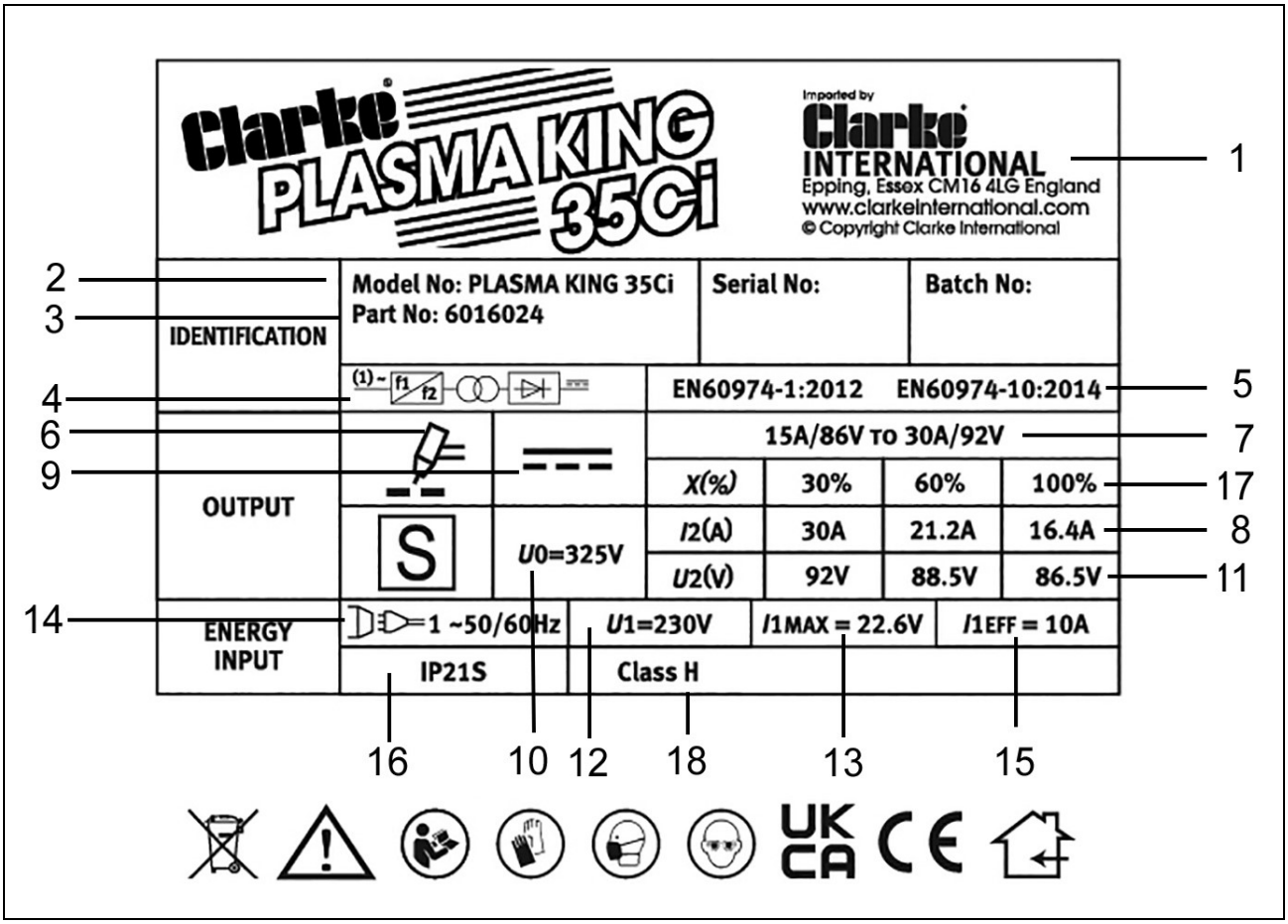

1	Name of manufacturer	10	Rated No-load Voltage
2	Model Number	11	Conventional Load Voltage
3	Part number	12	Rated Supply Voltage
4	Cutting Power Source	13	Rated Maximum Supply Current
5	British Standards applied	14	Energy Supply symbol
6	Process symbol	15	Rated max input current
7	Range of output	16	Degree of Protection
8	Rated Max supply current	17	Duty Cycle
9	Cutting Current symbol	18	Insulation grade

This machine is covered by regulations EN 60974-1:2022+A1:2022 / EN 60974-10: 2021+A1:2015, where the Duty Cycle is expressed as a percentage of time the machine may be used in a given period for a specified cutting current. e.g. When cutting at 24 Amps the machine may be used for 6 minutes (60%) in any 10 minute period.

DECLARATIONS OF CONFORMITY- UK

UK CA

Clarke® INTERNATIONAL

Hemnall Street, Epping, Essex, CM16 4LG

DECLARATION OF CONFORMITY

This is an important document and should be retained.

We hereby declare that this product(s) complies with the following legislation:

2014/30/EU	*Electromagnetic Compatibility Directive*
2014/35/EU	*Low Voltage Directive*
2011/65/EU	*Restriction of Hazardous Substances (RoHS) Directive*

The following standards have been applied to the product(s):

IEC 62321-7-1:2015, IEC 62321-7-2:2017, IEC 62321-1:2013, IEC 62321-2:2013, IEC 62321-5:2013, IEC 62321-4:2013+AMD1:2017, EN IEC 60974-7:2019, EN 50525-2-81:2011, IEC 62321-3-1:2013, IEC 62321-6:2015, IEC 62321-8:2017, EN 60974-12:2011, IEC 60974-13.2021, EN 60974-6.2016

The technical documentation required to demonstrate that the product(s) meet(s) the requirement(s) of the aforementioned legislation has been compiled and is available for inspection by the relevant enforcement authorities.

The UKCA mark was first applied in: 2025

Product Description:	Plasma Cutter
Model Number(s):	PLASMA KING 35CI
Serial/Batch Number:	Refer to product/packaging label
Date of Issue:	13/11/2025

Signed:

J.A Clarke

Director

PLASMA KING 35CI UKCA Clarke DOC 111325 Page 1 of 1

DECLARATIONS OF CONFORMITY - CE

CE

Clarke®
INTERNATIONAL
Fitzwilliam Hall, Fitzwilliam Place, Dublin 2

DECLARATION OF CONFORMITY

This is an important document and should be retained.

We hereby declare that this product(s) complies with the following legislation:

2014/30/EU	*Electromagnetic Compatibility Directive*
2014/35/EU	*Low Voltage Directive*
2011/65/EU	*Restriction of Hazardous Substances (RoHS) Directive*

The following standards have been applied to the product(s):

IEC 62321-7-1:2015, IEC 62321-7-2:2017, IEC 62321-1:2013, IEC 62321-2:2013, IEC 62321-5:2013, IEC 62321-4:2013+AMD1:2017, EN IEC 60974-7:2019, EN 50525-2-81:2011, IEC 62321-3-1:2013, IEC 62321-6:2015, IEC 62321-8:2017, EN 60974-12:2011, IEC 60974-13:2021, EN 60974-6:2016

The technical documentation required to demonstrate that the product(s) meet(s) the requirement(s) of the aforementioned legislation has been compiled and is available for inspection by the relevant enforcement authorities.

The CE mark was first applied in: 2025

Product Description:	Plasma Cutter
Model Number(s):	PLASMA KING 35CI
Serial/Batch Number:	Refer to product/packaging label
Date of Issue:	13/11/2025

Signed:

J.A Clarke

Director

PLASMA KING 35CI CE Clarke DOC 111325 Page 1 of 1

A SELECTION FROM THE VAST RANGE OF

Clarke®

QUALITY PRODUCTS













AIR COMPRESSORS
From DIY to industrial, Plus air tools, spray guns and accessories.

GENERATORS
Prime duty or emergency standby for business, home and leisure.

POWER WASHERS
Hot and cold, electric and engine driven - we have what you need

WELDERS
Mig, Arc, Tig and Spot.
From DIY to auto/industrial.

METALWORKING
Drills, grinders and saws for DIY and professional use.

WOODWORKING
Saws, sanders, lathes, mortisers and dust extraction.

HYDRAULICS
Cranes, body repair kits, transmission jacks for all types of workshop use.

WATER PUMPS
Submersible, electric and engine driven for DIY, agriculture and industry.

POWER TOOLS
Angle grinders, cordless drill sets, saws and sanders.

STARTERS/CHARGERS
All sizes for car and commercial use.

PARTS & SERVICE:
0208 988 7400

Parts Enquiries
Parts@clarkeinternational.com

Servicing & Technical Enquiries
Service@clarkeinternational.com

SALES: UK 01992 565333 or Export 00 44 (0)1992 565335

Clarke® INTERNATIONAL Hemnall Street, Epping, Essex CM16 4LG
www.clarkeinternational.com